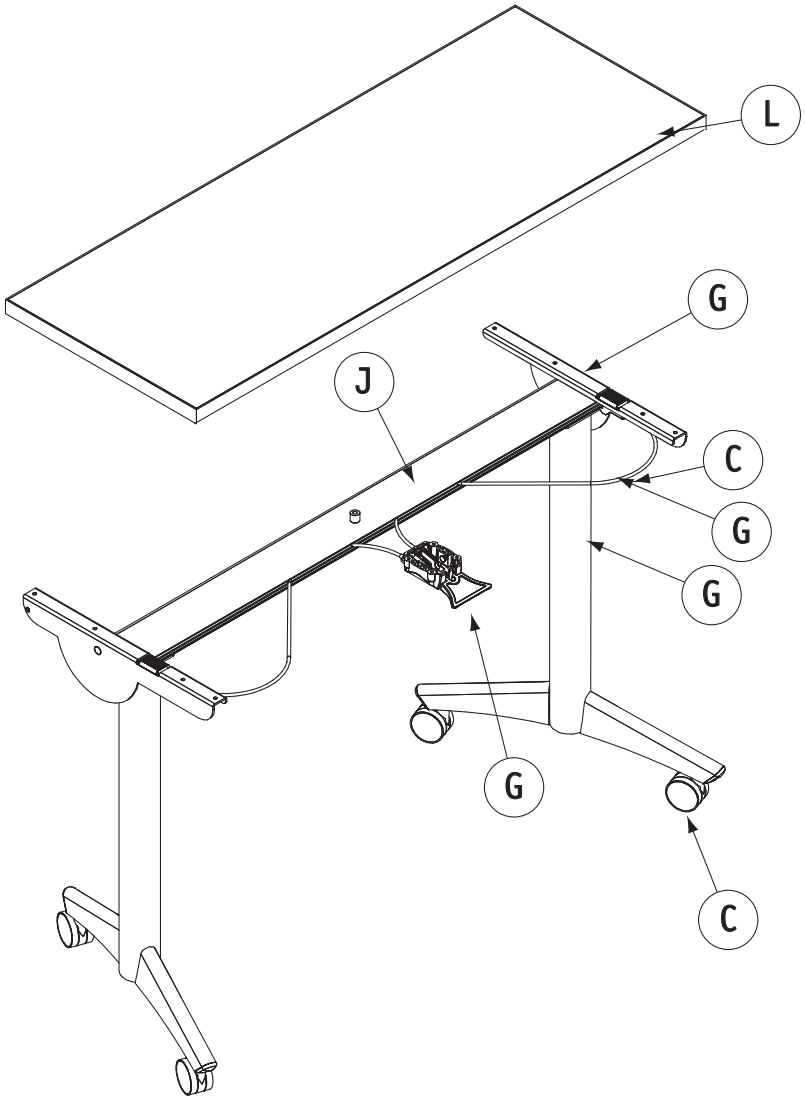

Myriad Training Table

Aluminum: J
Steel: G
Zinc: F
Copper: P
Glass: H
Wood: L
Fabric: A
Foam: B
Plastic 1: M
Plastic 2: O
Plastic 3: K
Plastic 4: I
Plastic 5: E
Plastic 6: N
Plastic 7: C
Plastic 9: D

Recommended Tools

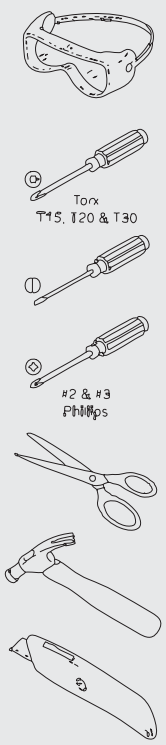

NATIONAL | Furniture with Personality®

Phone 800.482.1717
Fax 812.482.8800
www.nationalonline.com
A Unit of Kimball International
©Kimball International, Inc. 2008
Part No. 2106934
Rev. ,-