1 Base Placement Chart

Table Length	A	B	Cylinders, Square, Queen Anne, Thick Panel	Thin panel, Curved, Metal Bases
72	18	NA	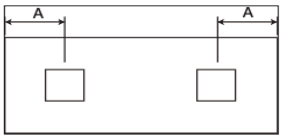	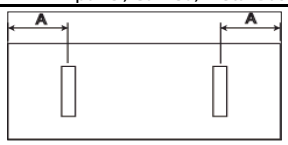
84	18	NA		
96	18	NA		
120	24	60	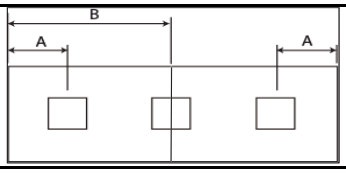	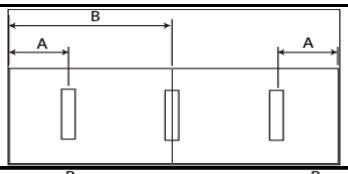
144	24	72		
168	24	64	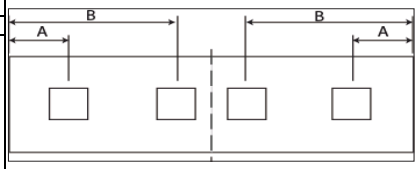	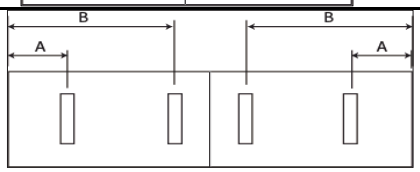
192	24	72 1/16		
216 (4Base)	24	28	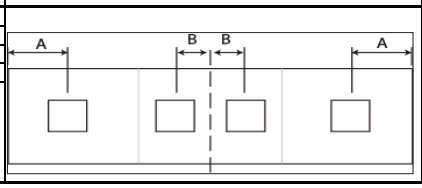	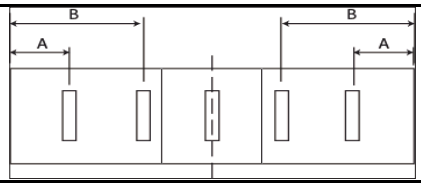
240 (4Base)	24	32		
216 (5Base)	24	66		
240 (5Base)	24	72		

Figure A

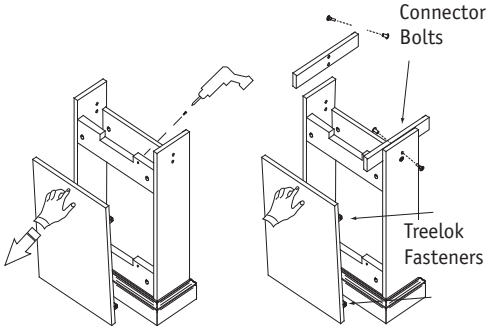

Figure B

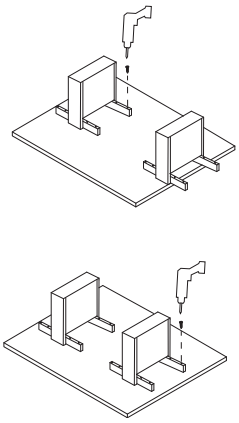

2

To remove access panel, first remove the shipping screw, with a phillips head screw driver (Figure A). To reinstall access panel, align the treelok fasteners on the access panel to the receptacles on the wood support rails. Push in to engauge (Figure A).

3

Align connecting holes in the cleat to the base. Attach together using two (2) connector bolts per cleat (Figure A). Insert half of a connector bolt into one connecting hole, insert the other half into the opposite connecting hole. Tighten all bolts with a Allen wrench.

4

Place the worksurfaces face down on a smooth, clean, dry surface. Per Base Placement chart position bases. Attach each Thick panel base with eight (8) #10 x 2 1/2" panhead screws (Figure B).

Proper product installation, in accordance with these instructions, is the responsibility of the installing agent. If you have any questions concerning these instructions, please call National Customer Service.

Conference and Training Solutions

Thick Panel Base

Recommended Tools

- Tape Measure or Ruler
- Phillips Head Screwdriver
- Allen Wrench

Package Contents	Qty.
• #8 x 1 3/4" Panhead Screws	per order
• #10 x 2 1/2" Panhead Screws	per order
• Connector Bolt	per order

NATIONAL | Furniture with Personality

Telephone 800.482.1717
Fax 812.482.8800
www.nationalofficefurniture.com

Part #2182457
Rev,-

Printed in U.S.A
© 2009 Kimball International, Inc.

Assembly Instructions

Thick Panel Base

3 Center the mounting brackets with the edge of the worksurfaces. Attach bracket to worksurface using #10 x 3/4" panhead screws, four (4) per bracket (Figure C). **NOTE:** Place brackets after bases have been applied per Base Placement Chart to ensure no interference.

Figure C

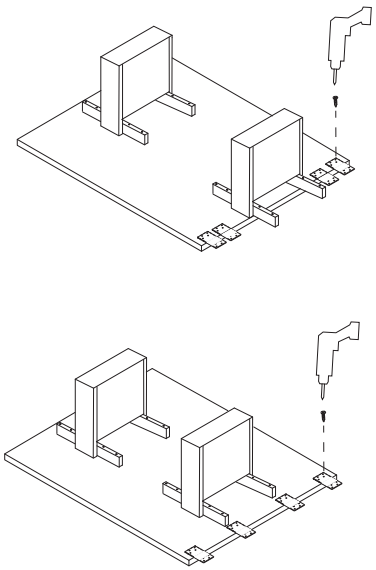

4 Locate Table in user position.
Two (2) Piece Worksurfaces Figure D
Three (3) Piece Worksurfaces Figure E
Align and level worksurfaces to ensure there are no gaps or cracks. Attach mounting brackets using #10 x 3/4" panhead screws, four (4) per bracket.

Figure D

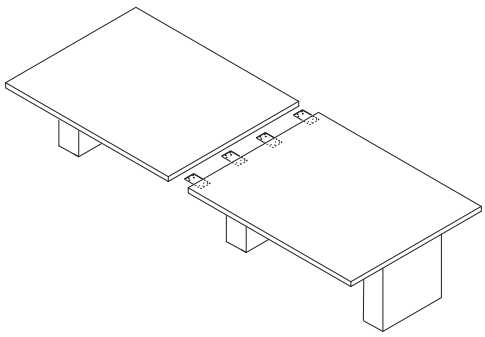

Figure E

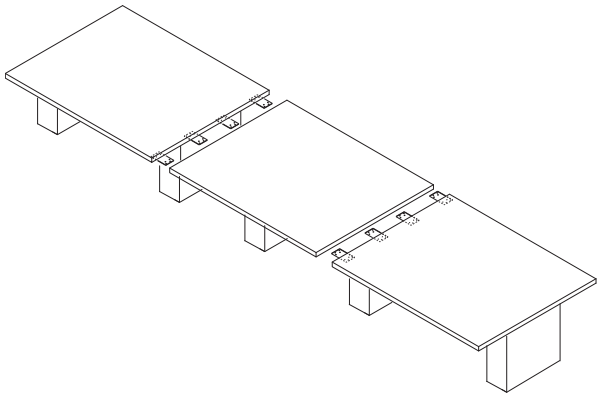

Proper product installation, in accordance with these instructions, is the responsibility of the installing agent. If you have any questions concerning these instructions, please call National Customer Service.