# ASSEMBLY INSTRUCTIONS

**1** Remove the protective film from both sides of the privacy screen panel. Align the pads on the privacys screen panel to the bases (Figure A). **NOTE:** A 48" Unit has (3) pads and bases.

**Figure A**

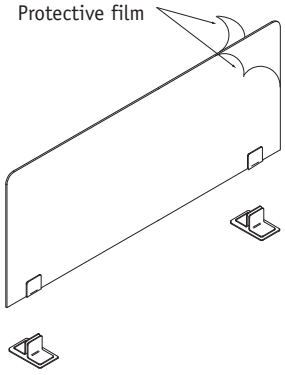


**Figure B**

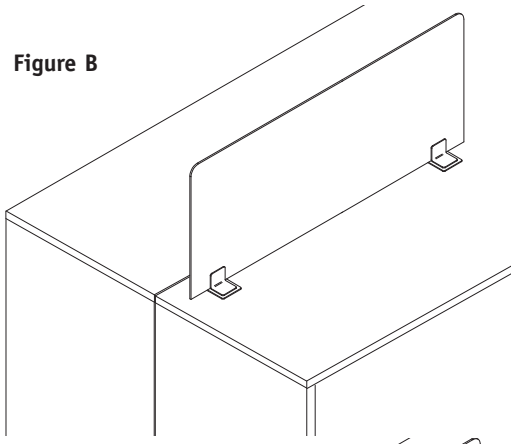

**2** Position the privacy screen either on a single unit as shown in(Figure B), When the
privacy screen is positioned between (2) units, divide the bases to sit on each unit (Figure C) **NOTE:** When sitting between (2) units, ensure both units are flush and level.

**Figure C**

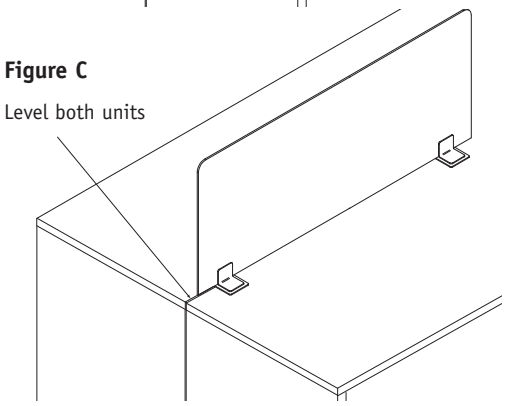


**3** Double sided tape is supplied if the placement is intented to be permanent.

**CAUTION:** The double sided tape is a very strong adhesive and bonds instantly to the surface it is applied to.

**Note:** Do not store or place the panel in a upright position other than as shown or flat. Improper storage could cause a permanent bow to set into the panel

**Figure D**

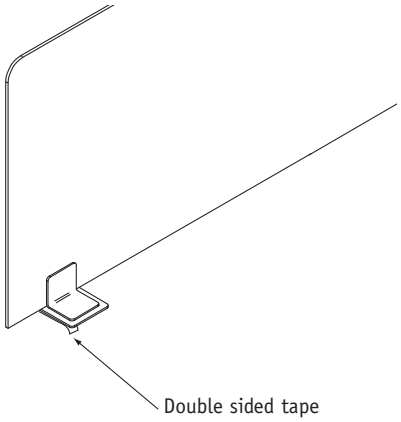


Proper product installation, in accordance with these instructions, is the responsibility of the installing agent. If you have any questions concerning these instructions, please call National Customer Service 800.482.1717.

## Renegade
PRIVACY SCREEN

| Recommend Tools | Qty. |
|---|---|
| • Level | |

| Package Contents | Qty. |
|---|---|
| • Unit | 1 |
| • Double sided tape | 1 |

NATIONAL
Furniture with Personality®

Telephone 800.482.1717
Fax 812.482.8800
www.NationalOfficeFurniture.com

Part #2251318
Rev,-

Printed in U.S.A
© 2010 Kimball International, Inc.