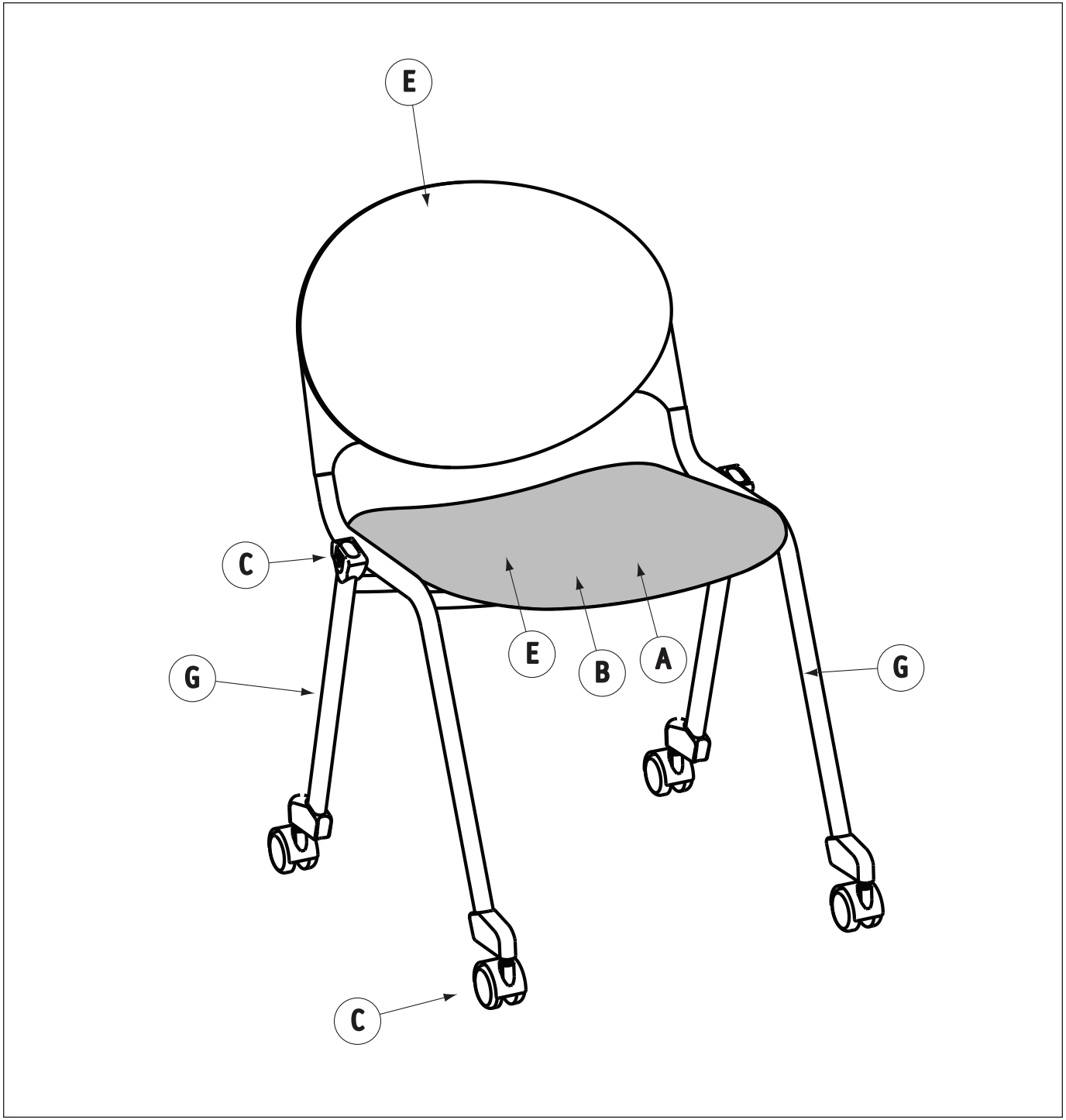


# SEATING

## CINCH

Aluminum: J
Copper: P
Steel: G
Zinc: F
Glass: H
Wood: L
Fabric: A
Foam: B
Plastic 1: M
Plastic 2: O
Plastic 3: K
Plastic 4: I
Plastic 5: E
Plastic 6: N
Plastic 7: C
Plastic 9: D

Recommended Tools

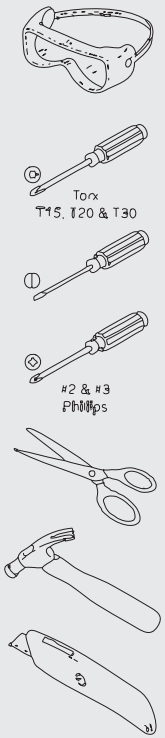


NATIONAL | Furniture with Personality

Phone 800.482.1717
Fax 812.482.8800
www.NationalOfficeFurniture.com
A Unit of Kimball International
©Kimball International, Inc. 2010

Part No. 2081940