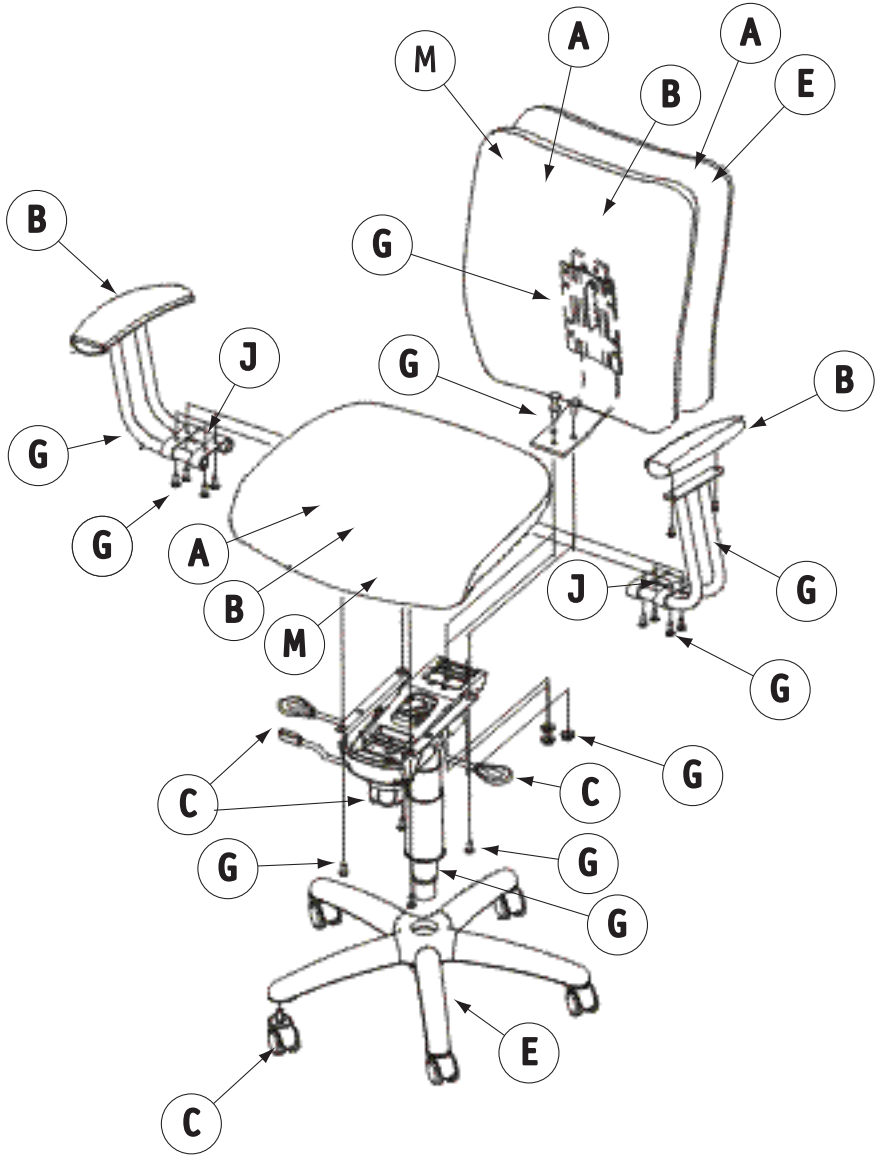

Mix-it Seating

Model No.
N12CC,N12CCS,N12DD,N12DDS,N12EE,12EES,
N12HH,N12HHS

Aluminum: J
Steel: G
Zinc:
Glass:
Laminate:
Wood:
Fabric: A
Foam: B
Plastic 1: M
Plastic 2:
Plastic 3:
Plastic 4:
Plastic 5: E
Plastic 6:
Plastic 7: C

Recommended Tools

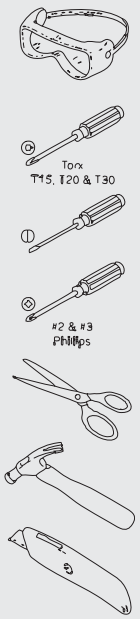

NATIONAL | Furniture with Personality®

Phone 800.482.1717
Fax 812.482.8800
www.nationalonline.com
A Unit of Kimball International
©Kimball International, Inc. 2008

Part No. 2081923