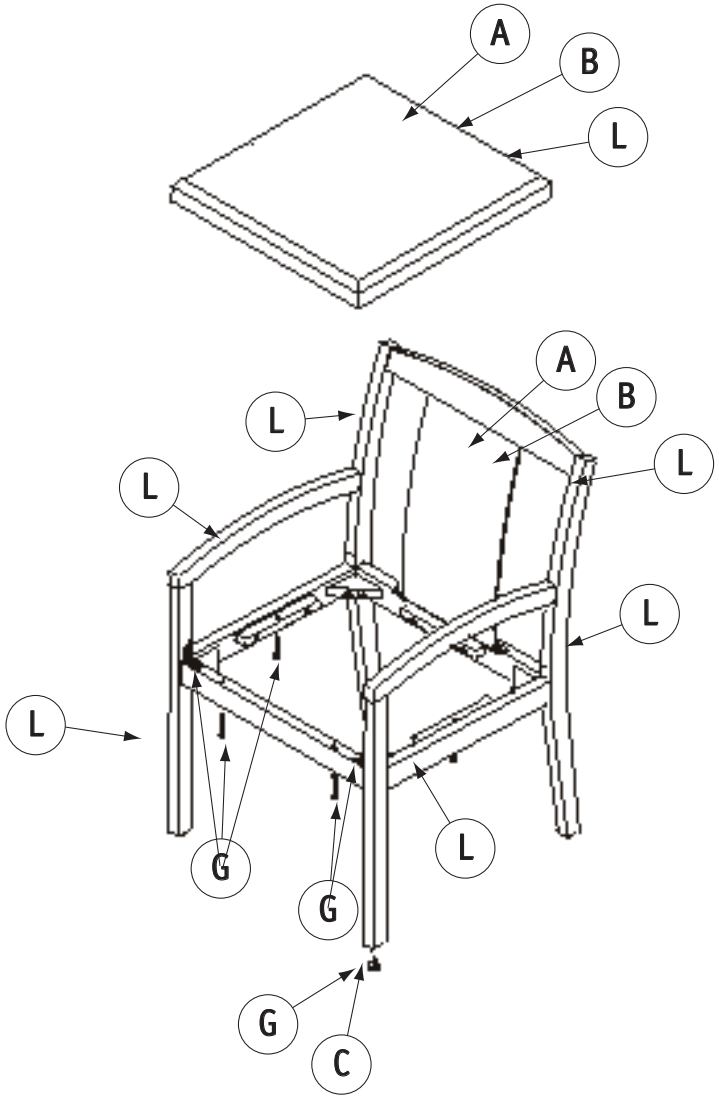

Timberlane Seating

Model No. 39L-GWXX, 39H-GWXX

Aluminum:
Steel:G
Zinc:
Glass:
Laminate:
Wood: L
Fabric: A
Foam: B
Plastic 1:
Plastic 2:
Plastic 3:
Plastic 4:
Plastic 5:
Plastic 6:
Plastic 7: C

Recommended Tools

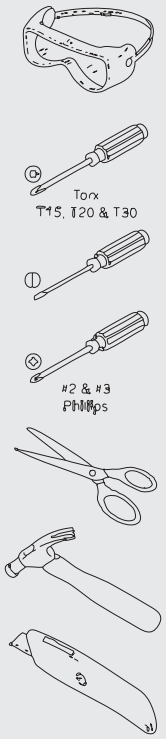

NATIONAL | Furniture with Personality™

Phone 800.482.1717
Fax 812.482.8800
www.nationalonline.com
A Unit of Kimball International
©Kimball International, Inc. 2008

Part No. 2081966